NUMBER C-173713

3rd ANGLE PROJECTION

METRIC

DIMENSIONS IN MILLIMETERS. DO NOT SCALE PRINT

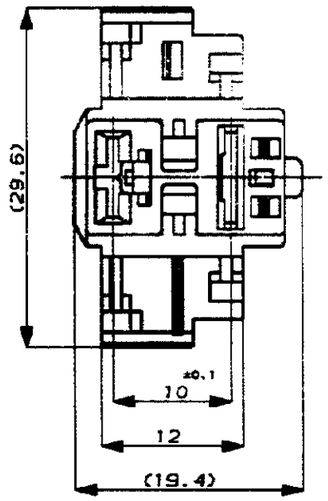

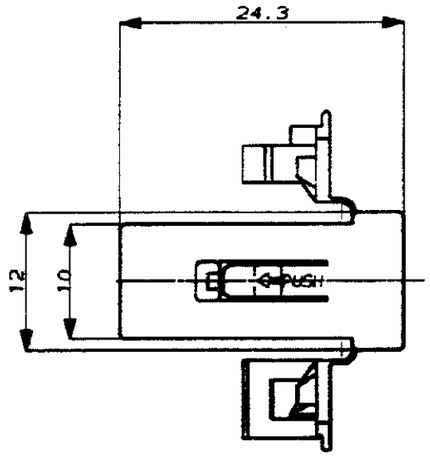

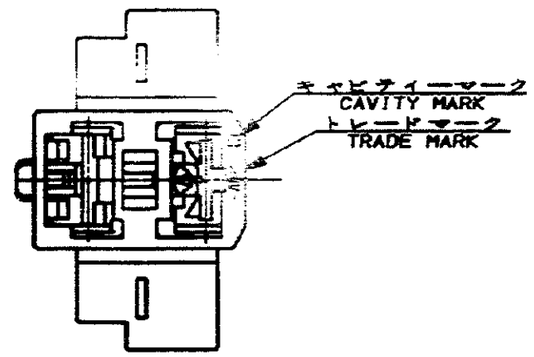

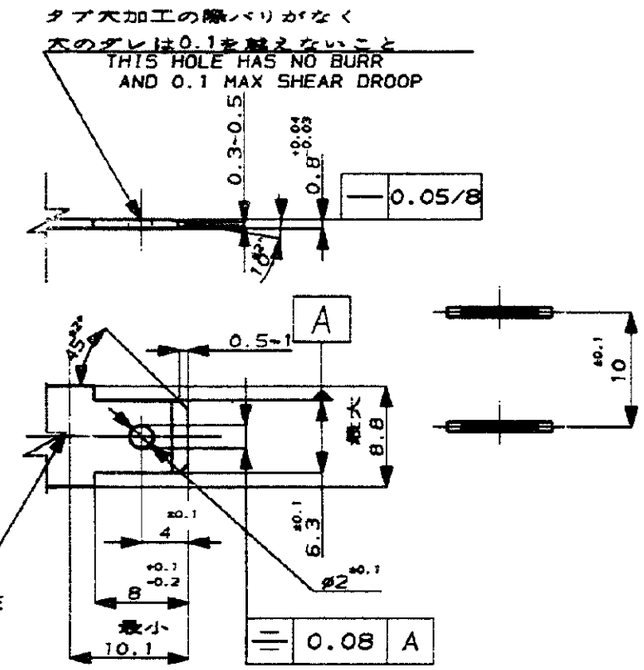

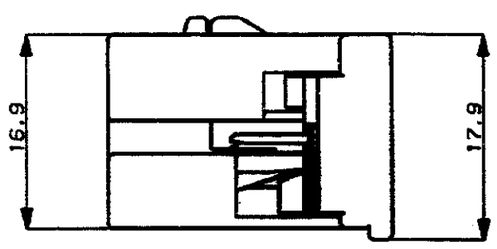

タブ寸法推奨図

RECOMMONDED TAB DIMENSION

仕上:メッキなし又は錫メッキ
材料:黄銅0.8t JIS-3100,C2600P-1/2H

FINISH:PLAIN OR TIN
MATERIAL: BRASS 0.8t
JIS-3100,C2600P-1/2H

NOTE;

1 PRODUCT SPEC:108-5164
2 APPLICATION SPEC:114-5060,114-5088
3 IS NO:CM-177J
4 CONTACTS:171655,171656,170452,170454

注;

1 製品規格番号:108-5164
2 取付適用規格番号:114-5060,114-5088
3 取扱説明書番号:CM-177J
4 適用端子型番:171655,171656,170452,170454

灰 (GRAY)	173713-6
黒 (BLACK)	173713-2
色 (COLOR)	型番

© 1986 BY AMP (Japan) LTD.
ALL RIGHTS RESERVED.
AMP PRODUCTS COVERED BY PATENTS
AND OR PATENTS PENDING.

AMP

AMP (JAPAN), LTD.
Tokyo, Japan

LTR	REVISION RECORD	DR	CHK	DATE
0	RELEASED (J-9417)	H.B		5/18/87

WIRE RANGE: mm² (AWG -)
INSULATION DIA: - mm
MATERIAL: 6/6 ナイロン (6/6NYLON)
FINISH: ---
DR. H. Betsui 5/18/87
DE. H. Betsui 5/18/87
CHK. 5/18/87
APP. 5/18/87

NAME .250 ポジティブロック 2極 プラグハウジング シェイク ハンド タイプ
(.250 POSITIVE LOCK 2P PLUG HSG SHAKE HAND TYPE)

GENERAL TOLERANCE
0<≦10 : ±0.2
10<≦30 : ±0.25
30<≦100 : ±0.3
ANGLES : ±3°

SIZE	LOC	NUMBER
B	J	C-173713

SCALE	REV.	SHEET
2-1	0	1 OF 1

PRINT DIST

AMP-J
REV.10/'83

CUSTOMER DRAWING