THIS DRAWING IS UNPUBLISHED. RELEASED FOR PUBLICATION -.- .
© COPYRIGHT - By - ALL RIGHTS RESERVED.

LOC	DIST
CM	54

REVISIONS

P	LTR	DESCRIPTION	DATE	DWN	APVD
	Y1	REVISED PER ECO-11-004587	11MAR11	RK	HMR

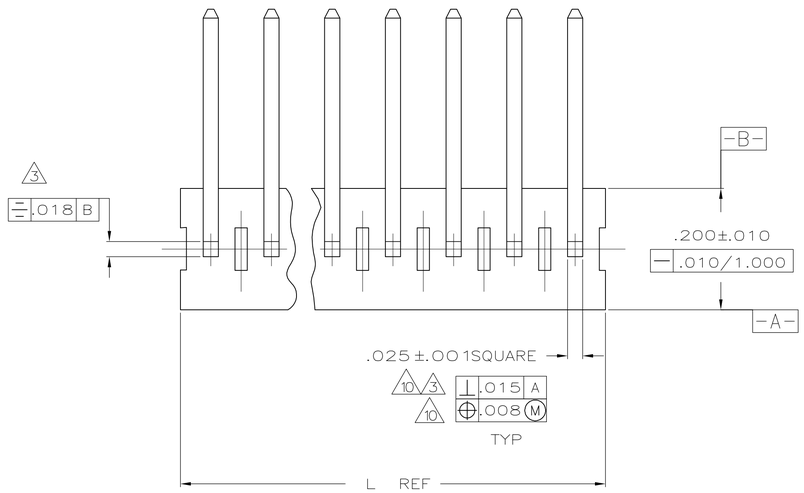

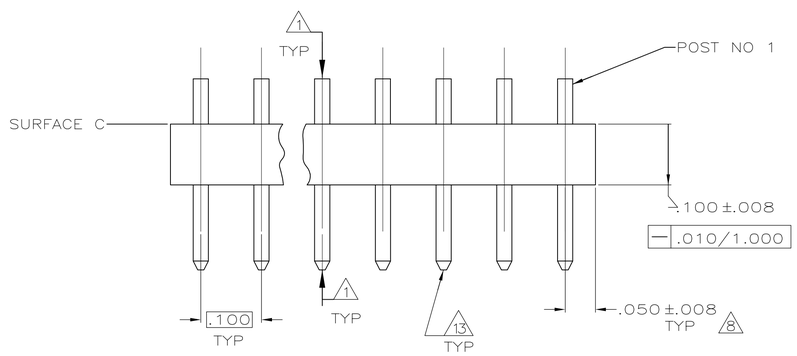

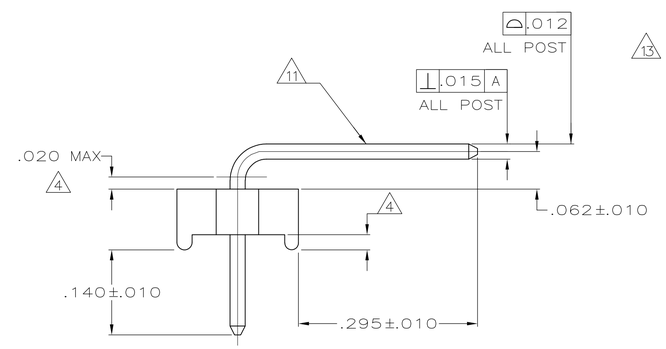

1. POST TO WITHSTAND 13 NEWTONS (3LBS.) MIN. AXIAL FORCE IN BOTH DIRECTIONS SHOWN WITHOUT DISLODGING.
2. TOLERANCES APPLY TO SOLDER SIDE OF BOARD.
3. MEASURED AT SURFACE C.
4. PLASTIC FLASH PERMITTED IN THIS AREA.
5. PARTS COMPLY WITH AMP SOLDERABILITY SPEC. NO. 109-11-2.
6. ONE HOLE MAY BE UNDERSIZED (.035/.032 DIA.) FOR ASSEMBLY RETENTION DURING WAVE SOLDERING.
7. MATERIAL: HEADER-THERMOPLASTIC POLYESTER 94V-0(NATURAL)
   POST-COPPER ALLOY (TIN PLATED)
8. COORDINATE DIMENSION APPLIES FROM CENTER OF ACTUAL FEATURE.
9. PLASTIC BURRS CAUSED BY CUT-OFF TOOLING ARE PERMITTED WITHIN THE MAXIMUM TOLERANCE ENVELOPE.
10. POST TO BE MEASURED WHEN STRIP IS HELD FLAT.
11. POST MUST WITHSTAND TWO 90 BENDS AGAINST EXTRUSION WITHOUT BREAKING.
12. DIMENSION SHOULD BE .120-.240 WHEN MATING WITH A MTA 100 CONNECTOR ASSEMBLY OR .120 MIN WHEN MATING WITH A CST 100 CONNECTOR.
13. PIN BURR OF .005 MAX. VERTICAL AND .003 MAX. HORIZONTAL PERMITTED AT POST TIPS ON BOTH ENDS.

L IN	L MM	NUMBER OF POSITIONS	PART NUMBER
2.800	71.12	28	2-640453-8
2.700	68.58	27	2-640453-7
2.600	66.04	26	2-640453-6
2.500	63.50	25	2-640453-5
2.400	60.96	24	2-640453-4
2.300	58.42	23	2-640453-3
2.200	55.88	22	2-640453-2
2.100	53.34	21	2-640453-1
2.000	50.80	20	2-640453-0
1.900	48.26	19	1-640453-9
1.800	45.72	18	1-640453-8
1.700	43.18	17	1-640453-7
1.600	40.64	16	1-640453-6
1.500	38.10	15	1-640453-5
1.400	35.56	14	1-640453-4
1.300	33.02	13	1-640453-3
1.200	30.48	12	1-640453-2
1.100	27.94	11	1-640453-1
1.000	25.40	10	1-640453-0
.900	22.86	9	640453-9
.800	20.32	8	640453-8
.700	17.78	7	640453-7
.600	15.24	6	640453-6
.500	12.70	5	640453-5
.400	10.16	4	640453-4
.300	7.62	3	640453-3
.200	5.08	2	640453-2
-	-	-	-

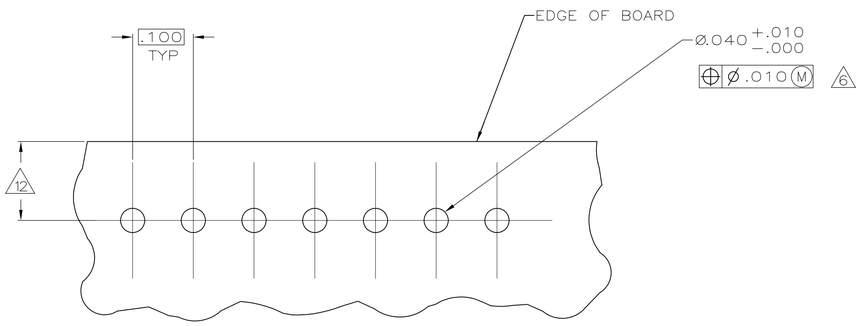

RECOMMENDED MOUNTING HOLE PATTERN 2
FOR .063 THICK P.C. BOARD

IN	MM	IN	MM
.032	0.81	1.000	25.40
.025	0.64	.295	7.49
.020	0.51	.240	6.10
.018	0.46	.200	5.08
.015	0.38	.140	3.56
.012	0.30	.120	3.05
.010	0.25	.100	2.54
.008	0.20	.063	1.60
.005	0.13	.062	1.57
.003	0.08	.050	1.27
.001	0.03	.040	1.02
.000	0.00	.035	0.89

CONVERSION TABLE

METRIC

THIS DRAWING IS A CONTROLLED DOCUMENT.

DIMENSIONS: mm [INCHES]

TOLERANCES UNLESS OTHERWISE SPECIFIED:
0 PLC ± -
1 PLC ± -
2 PLC ± -
3 PLC ± .005
4 PLC ± -
ANGLES ± -

MATERIAL 7
FINISH 7

DWN L. SMITH 2-8-93
CHK R. SWING 2-8-93
APVD R. SPEER 3-4-93

PRODUCT SPEC —
APPLICATION SPEC —
WEIGHT —

TE Connectivity

NAME MTA 100 HEADER ASSEMBLY, PLAIN, .025 SQUARE RIGHT ANGLE POST, TIN-PLATED

SIZE	CAGE CODE	DRAWING NO	RESTRICTED TO
A1	00779	C-640453	—

CUSTOMER DRAWING | SCALE 8:1 | SHEET 1 OF 1 | REV Y1

4805 (3/11)