Part Number: 19017-0047

Status: Active

Description: InsulKrimp™ Quick Disconnect, Female, for 10-12 (5.00-3.30mm²) Wire, Box, Tab 6.35 x 0.81mm

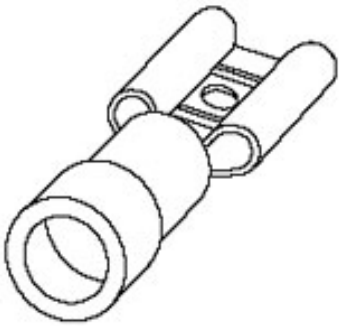

Series

image - Reference only

Documents:

Drawing (PDF)
Product Specification PS-19902-011 (PDF)
Product Specification PS-19902-013 (PDF)
RoHS Certificate of Compliance (PDF)

Agency Certification

CSA	LR18689
UL	E79133

General

Product Family	Quick Disconnects
Series	19017
Crimp Quality Equipment	Yes
MolexKits	Yes
Product Name	InsulKrimp™
Type	Quick Disconnect
UPC	800753036345

Physical

Barrel Type	Closed
Color - Resin	Natural
Flammability	94V-0
Gender	Female
Glow-Wire Compliant	No
Insulation	PVC
Lock to Mating Part	None
Material - Metal	Brass
Material - Resin	PVC
Net Weight	1.297/g
Orientation	Straight
Packaging Type	Bag
Polarized to Mating Part	No
Tab Thickness	0.81mm
Tab Width	6.35mm
Temperature Range - Operating	-50°C to +105°C
Wire Insulation Diameter	6.40mm max.
Wire Size AWG	10, 12
Wire Size mm²	3.30 - 5.00

Electrical

Voltage - Maximum	600V

Material Info

Old Part Number	C-2143

Reference - Drawing Numbers

Product Specification	PS-19902-011, PS-19902-013
Sales Drawing	SD-19017-003

EU RoHS
ELV and RoHS Compliant
REACH SVHC
Not Reviewed
Low-Halogen Status
Not Reviewed

China RoHS

Need more information on product environmental compliance?

Email productcompliance@molex.com
For a multiple part number RoHS Certificate of Compliance, click here

Please visit the Contact Us section for any non-product compliance questions.

Search Parts in this Series
19017Series

Application Tooling | **FAQ**

Tooling specifications and manuals are found by selecting the products below. Crimp Height Specifications are then contained in the Application Tooling Specification document.

Global

Description	Product #
PremiumGrade™ Hand Crimp Tool	0640010200
Crimp Head for the AT-200™ Pneumatic Hand Tool	0640050200