PRODUCT NUMBER	REMARKS
65191–001	see sheet 1
65191–002	see sheet 2

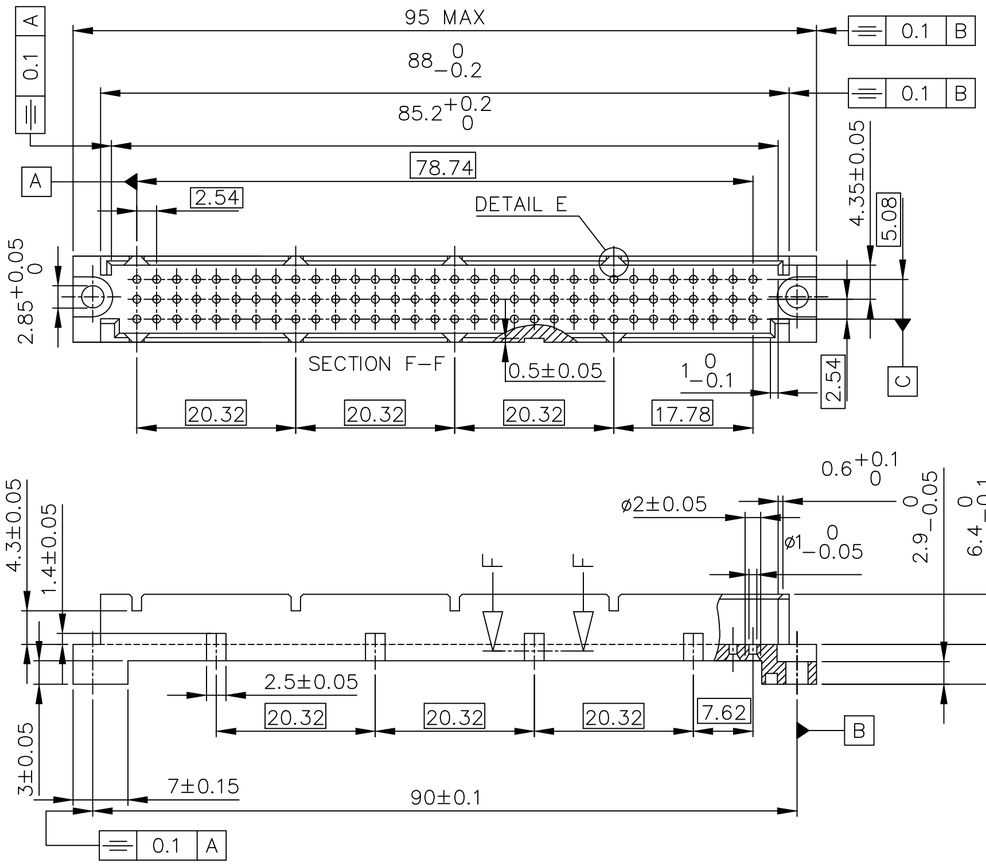

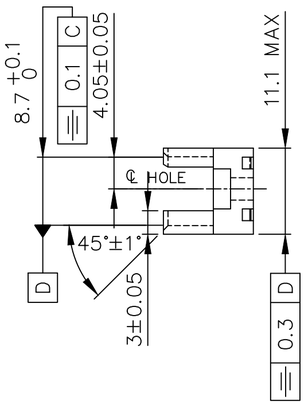

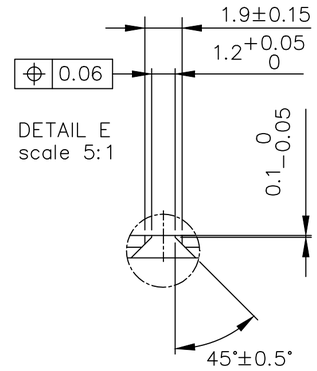

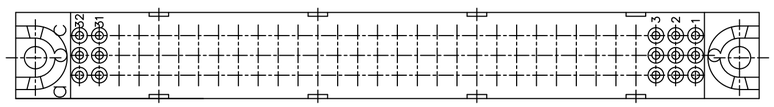

THERMOPLASTIC POLYESTER; FLAME RETARDANT PER UL–94–V0; COLOUR: GREY

NOTES:–

1. THIS PRODUCT MEETS EUROPEAN UNION DIRECTIVES AND OTHER COUNTRY REGULATIONS AS DESCRIBED IN GS–22–008.
2. LEADFREE OR RoHS DIRECTIVE LABELLING TO BE PROVIDED AS PER GS–14–920.
3. " LF " SUFFIX TO PRODUCT NUMBER FOR RoHS COMPATIBLE/ LEADFREE VERSION.
4. PARTS WITH AND WITHOUT "LF " SUFFIX ARE FORM–FIT AND FUNCTIONALLY IDENTICAL. " LF " SUFFIX PROVIDED FOR PART NUMBER STANDARDISATION OF PART THAT MEETS RoHS REQUIREMENTS.

ltr	ecn no	dr	date
K	H70344	DDB	1997–06–03
L	F00406	LLA	2000–05–22
M	I05–0123	MINI	2005–07–27
N	I05–0248	MINI	2005–11–22
P	I06–0068	MINI	2006–06–01
R	I11–0139	MJA	2011–07–18

dr	D.LEGRAND	2000–10–09
engr	J.F.NOTTEAU	2000–10–09
chr	RAKHEE GEORGE	2006–06–01
appd	RAKHEE GEORGE	2006–06–01

sheet index	revision	R	G
	sheet	1	2

mat'l. code: SEE NOTE
surface: ISO 1302
tolerance: ISO 406 ISO 1101
tolerances unless otherwise specified
angles / linear
projection
mm
scale –
product family: BACKPANEL
title: B.P SHROUD
dwg no: 65191
sheet 1 of 2
size: A2
type: Product Customer Drawing

form: A3

FCIconnect.com
Copyright FCI

PRODUCT NUMBER	65191–002

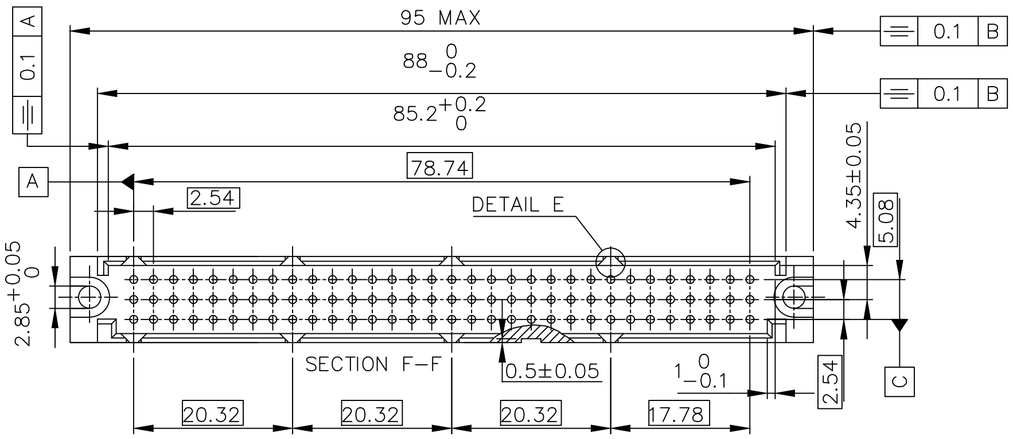

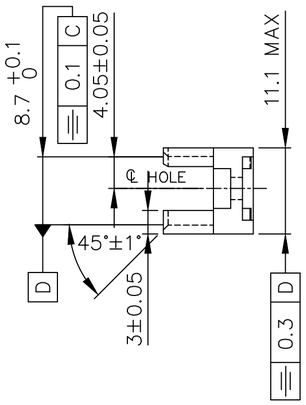

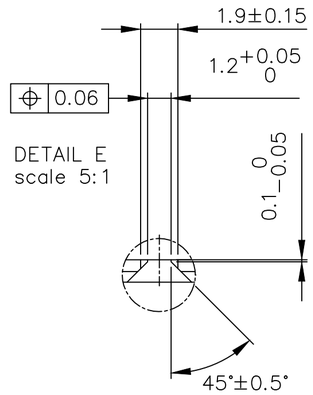

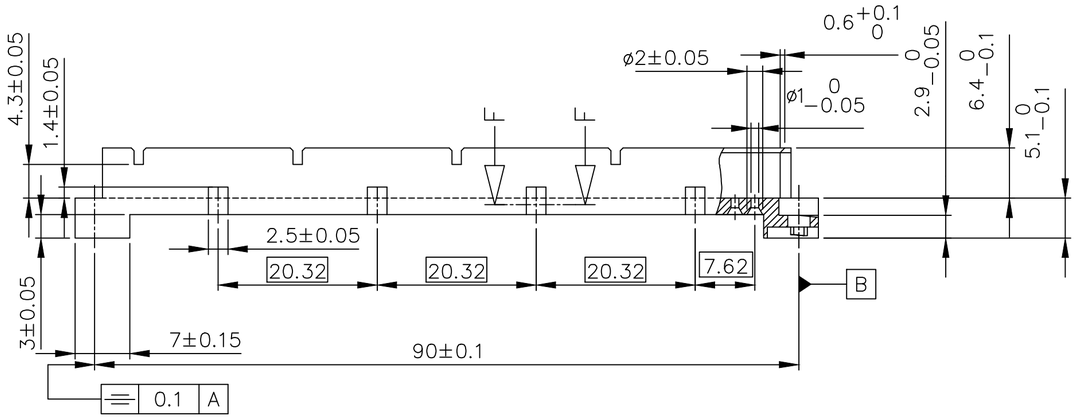

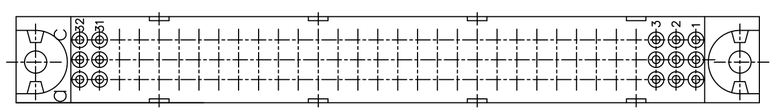

THERMOPLASTIC POLYESTER; FLAME RETARDANT PER UL–94–V0; COLOUR: GREY

NOTES:–

1. THIS PRODUCT MEETS EUROPEAN UNION DIRECTIVES AND OTHER COUNTRY REGULATIONS AS DESCRIBED IN GS–22–008.
2. LEADFREE OR RoHS DIRECTIVE LABELLING TO BE PROVIDED AS PER GS–14–920.
3. " LF " SUFFIX TO PRODUCT NUMBER FOR RoHS COMPATIBLE/ LEADFREE VERSION.
4. PARTS WITH AND WITHOUT "LF " SUFFIX ARE FORM–FIT AND FUNCTIONALLY IDENTICAL. " LF " SUFFIX PROVIDED FOR PART NUMBER STANDARDISATION OF PART THAT MEETS RoHS REQUIREMENTS.

ltr	ecn no	dr	date
C	H70344	DDB	1997–06–03
D	I05–0123	MINI	2005–07–27
E	I05–0248	MINI	2005–11–22
F	I06–0068	MINI	2006–06–01
G	I11–0139	MJA	2011–07–18

dr	D.LEGRAND	2000–10–09
engr	J.F.NOTTEAU	2000–10–09
chr	RAKHEE GEORGE	2006–06–01
appd	RAKHEE GEORGE	2006–06–01

mat'l. code: SEE NOTE
surface: ISO 1302
tolerance: ISO 406 ISO 1101
tolerances unless otherwise specified: angles, linear
projection
mm
scale –
product family: BACKPANEL
title: B.P SHROUD
dwg no: 65191
sheet 2 of 2
size: A2
type: Product Customer Drawing
sheet index: revision / sheet 1

form: A3

FCIconnect.com
Copyright FCI