DRAWING MADE IN AMERICAN PROJECTION

REV.	DESCRIPTION	DATE	DRAWN	APVD
D1	REVISED PER ECO-11-005140	31MAR11	RK	HMR

NUMBER C-165514

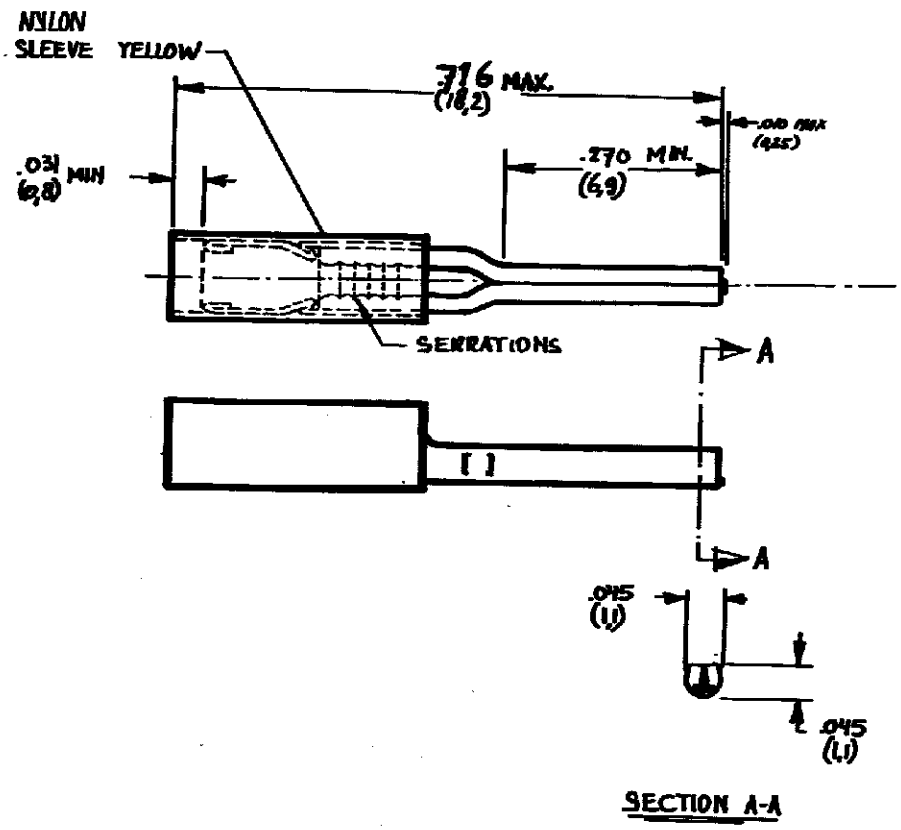

SECTION A-A

DOC. CENTRE
29 OKT. 1991

DIMENSIONS IN (MM) DO NOT SCALE PRINT

CUSTOMER COPY FOR REFERENCE ONLY

TE Connectivity

ORDER NO.	MATERIAL	PLATING
165514-1	COPPER	TINPLATED

WIRE RANGE 26-22 AWG (0.15-0.4 mm²) | INSUL. RANGE .083 (2.1) DIA. | FIRST USED —

DR	DATE	DE	DATE
R.W.M.B.	26-8-76		
CHK	DATE	APP	DATE
	26/8/76		26-8-76

SCALE N.T.S. | SIZE A | NO C-165.514 | REV D1

NAME PIDG WIRE PIN