multimec®

5G + 1KS/1KBS/1KCS

Technical Data:
- through-hole or SMD
- 50mA/24VDC
- single pole/momentary
- 10.000.000 operations lifetime
- IP67 sealing
- temp. range: switch:-40/+160°C
  LED: -30/+85°C
  solid keycap: -40/+65°C
  transparent keycap: -40/+85°C
- actuation force: 2.0, 3.5, 6.5 N

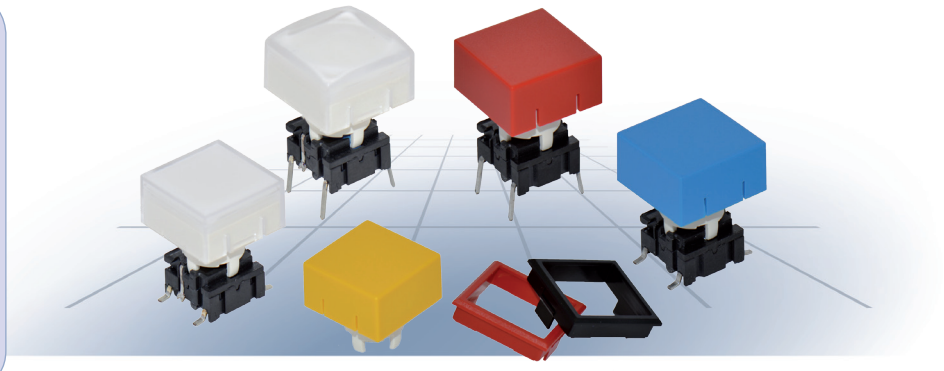

Dimensions (SMD) + 1KS

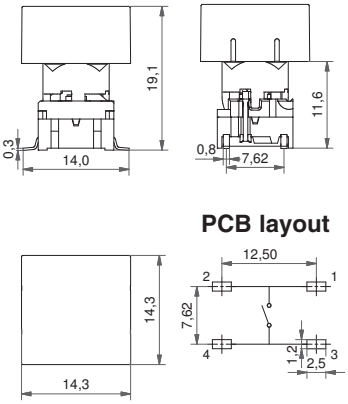

Dimensions (TH w/LED) + 1KBS

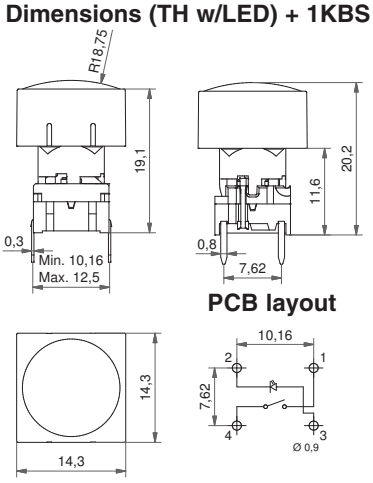

Dimensions (SMD w/LED) + 1KCS

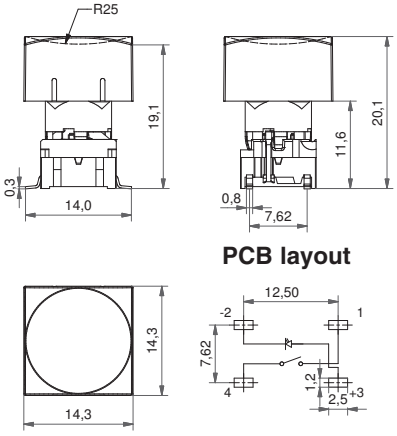

Dimensions (Bezel) (optional)

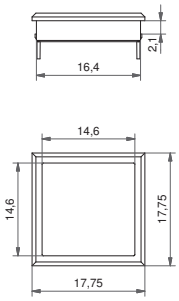

HOW TO ORDER illuminated

5 G				+	1 1 1 6	+	2 K	
Switch	**Mounting**	**Actuation force**	**LED**		**Cap** frosted white		**Bezel**	
	TH9 through-hole	**20**	**01** blue		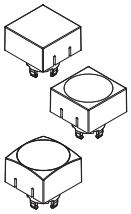		**03** grey	
	SH9 surface mount	**35**	**22** green				**06** white	
		65	**42** yellow				**08** red	
		Q*	**61** white				**09** black	
			82 red					
			2242 green/yellow					
			8222 red/green					
			8242 red/yellow					

1KS
1KBS
1KCS

HOW TO ORDER non-illuminated

5 G			+	1 K S 1 6	+	2 K	
Switch	**Mounting**	**Actuation force**		**Cap**	**Colour code**	**Bezel**	
	TH9 through-hole	**20**		1KS	**00** blue	**03** grey	
	SH9 surface mount	**35**			**02** green	**06** white	
		65			**03** grey	**08** red	
		Q*			**04** yellow	**09** black	
					06 white		
					08 red		
					09 black		

*Quiet version only available for actuation force 2.0N (20) and the letter Q is added to the end of the switch part number. See the ordering example.

Ordering example: 5GTH93501+1KCS1116+2K09 with illumination
5GSH965+1KS09+2K03 without illumination
*5GTH92082Q with illumination+ 1KCS1116 (quiet version)

See colour codes on our website: www.mec.dk

For updates of products and/or changes of specifications please see www.mec.dk

Dimensions (mm) Unless otherwise specified, all tolerances +/- 0,2

MEC A/S October 2011

MEC A/S Industriparken 23 • DK-2750 Ballerup • Denmark
Phone: +45 44 97 33 66 • Fax: +45 44 68 15 14 • E-mail: danmec@mec.dk • www.mec.dk.