Copyright FCI.

FCIconnect.com

PRODUCT NUMBER	PITCH
AD16505000J0G	5.08 mm

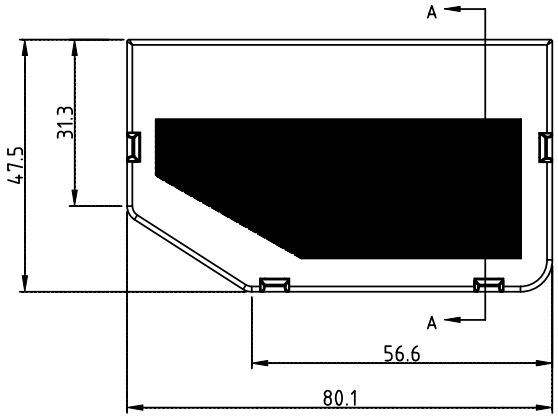

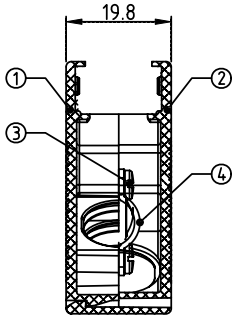

Section A-A

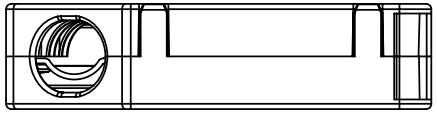

Material

- Item①Terminal (Bottom shell): Thermoplastic (UL94-HB) Color: Green(RAL6018/T)
- Item②Terminal (Top shell): Thermoplastic (UL94-HB) Color: Green(RAL6018/T)
- Item③Screw: Steel Zinc plated, "-" solt. PA 2.9×8.9
- Item④Locating piece: SPCC (T=1.0mm), Zinc plated

mat'l. code				surface ASME Y14.5		tolerance ASME Y14.5	projection	product family TERMINAL BLOCK
ltr	ecn no	dr	date	tolerances unless otherwise specified				title
				angles	linear	X.±0.5	MM	TERMINAL BLOCK
						X.X±0.3		ACCESSORIES
				X°±1°		X.XX±0.1	scale	
				dr	EVIN ZHONG	070914		dwg no AD16505000J0G sheet 1 of 1 size A4
				engr	EVIN ZHONG	070914		
				chr	HANKE FENG	070914		
				appd	SHI JUN	070914		type CUSTOMER Drawing
sheet index	revision	A						
	sheet	1						