MARKETING SALES DRAWING

DIMENSIONS IN INCHES - DO NOT SCALE THIS DRAWING

DIMENSIONS INMETRIC - [ ]

Electrical Testing per Tusonix standard test plans and Mil-Std-202 Test Methods.

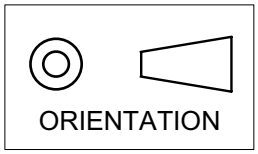

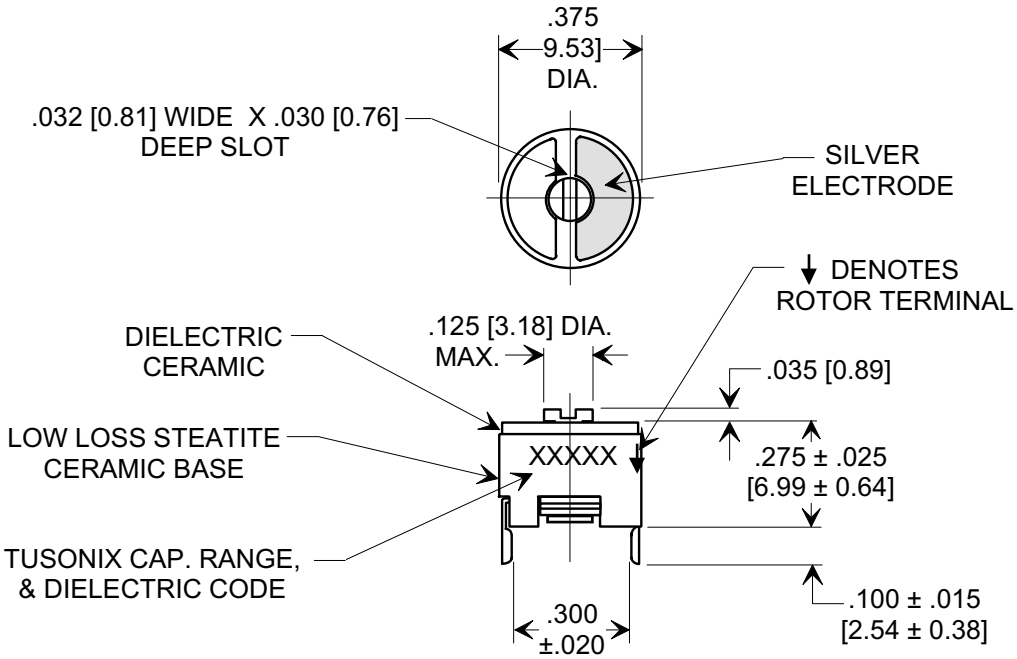

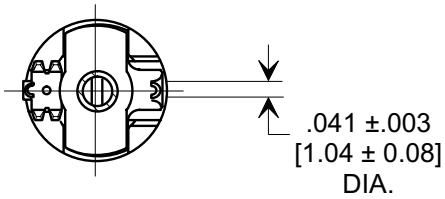

NOTE:
ALL METAL PARTS SILVER PLATED.

FOR DIMENSIONS ≤ .125"/3.18mm,
TOLERANCE IS ±.015"/0.38mm.
FOR DIMENSIONS ≥ .126"/3.20mm,
TOLERANCE IS ±.030"/0.76mm.

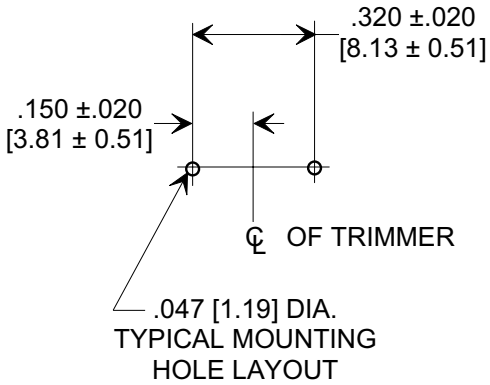

ORDERING INFORMATION

Part No.	538-011 F 15.0-60
Value	15.0 - 60pF
Value Tol.	MIN. +10%, MAX. -10% +100%
Dielectric Type Code	F
Rating	200 WVDC @ 85°, 100 WVDC @ 125°C
Operating Temperature Range:	-55°C TO + 125°C
To Tusonix Spec Unless Stated Otherwise	

REVISION RECORD		
Original Release C.O. 19990913-2-01	0	METRIC DIM'S & ORINTATION SYMBOL CIRCUIT & NOTES ADDED L.E. 06-03-03
20030530-1-03	1	

X-2015 Rev-0

TOLERANCES unless otherwise specified
2 PLC. DECIMAL ±
3 PLC. DECIMAL ±
ANGLES ± 10°

TUSONIX
TUCSON, ARIZONA

Title **CERAMIC TRIMMER**

Drawn S.M. 09-14-99 Scale 2 X

Approved E.F. 09-14-99

A **538-011 F 15.0-60**