crydom
www.crydom.com

# DRH Series

| REV. DATE | For Technical Support: |
|---|---|
| 12/02/15 | support@crydom.com<br>support-europe@crydom.com |

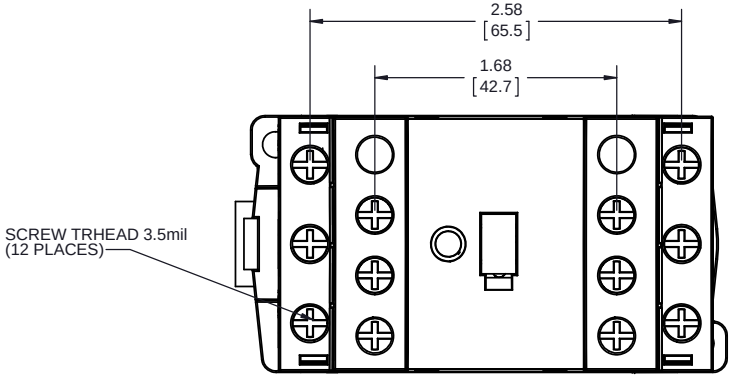


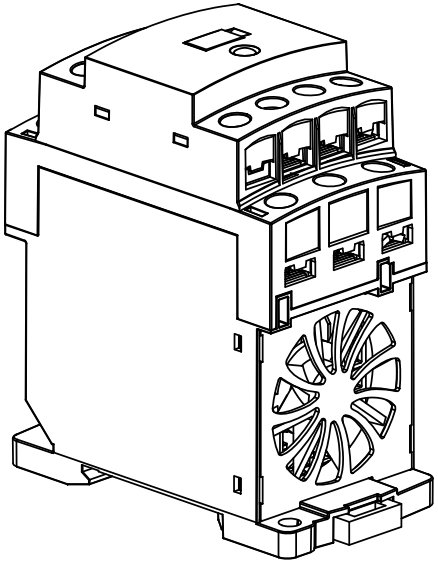

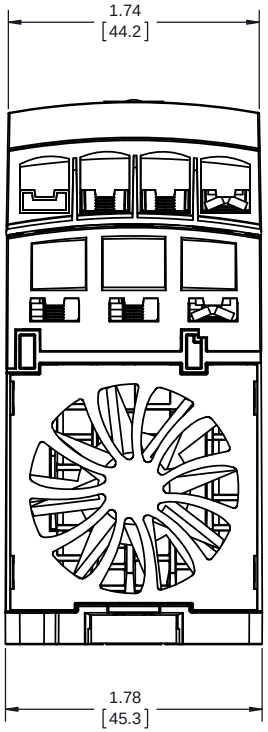


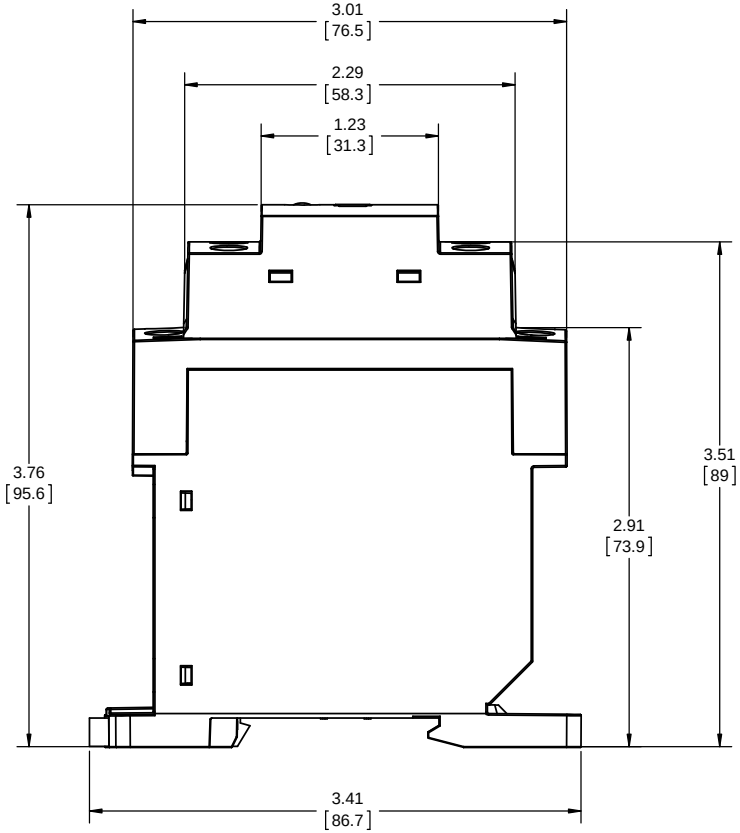


Tolerances: ± 0.02 in / 0.5 mm. All dimensions are in: inches [millimeters]