ITEM	CONNECTOR PART NO.	DESCRIPTION	IPI CHECK	EOR CHECK
1	RARSFP-1V-00 & RARSFC-1V	1 POS RIGHT-ANGLE RSF HOUSING & COVER		
1	RASRSF-61-250A	RIGHT-ANGLE RSF TERMINAL – BRASS		
2	UL1015, 16 AWG	BLACK		

Applicable Tooling

APPLICATOR

SUGGESTED MATING TAB

	WITHOUT STABILIZER	WITH STABILIZER
DIM. "A"	2.20 [0.087] MIN	4.20 ±0.15 [0.165 ±0.006]
DIM. "B"	7.40 [0.291] MIN	7.98 [0.314] MIN
DIM. "C"	5.90 [0.232] MAX	(7.6)

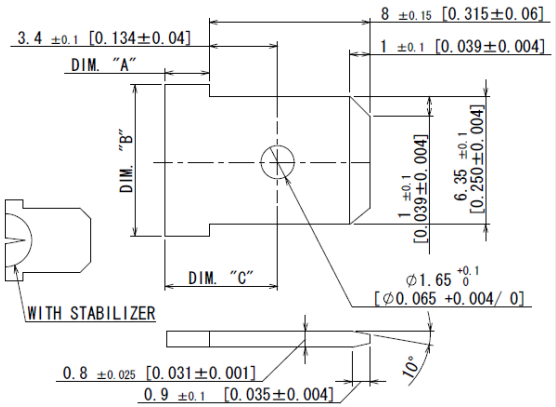

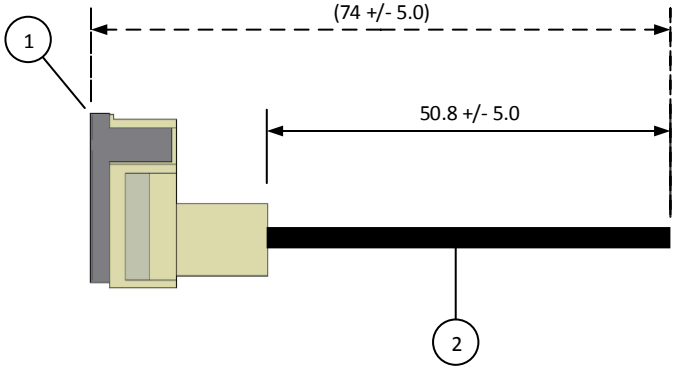

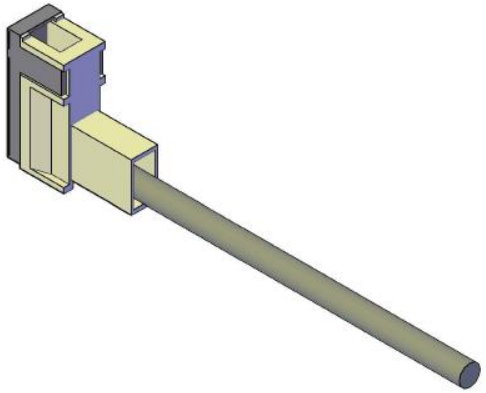

REV.	DESCRIPTION	DATE	BY

SCALE 1: 1	CUSTOMER NAME	CUSTOMER PART NO.
DIMENSIONS All dimensions are in MM with a tolerance of +/- 3.0 unless otherwise specified.	DESCRIPTION 2" INSIDE LENGTH – 1 POSITION, LIF, POS LOCK, .250, FLAG, SINGLE-END ASSY, BRASS, BLUNT LEAD, F	
DRAWN BY STEVEN PILKINGTON	ASSEMBLY PART NO. A01RARSFP16K51A	
CHECKED BY JUSTIN BAKER	DRAWING NO. & REVISION GAM-145	REVISED 3/16/2016