Schematics (Continued)

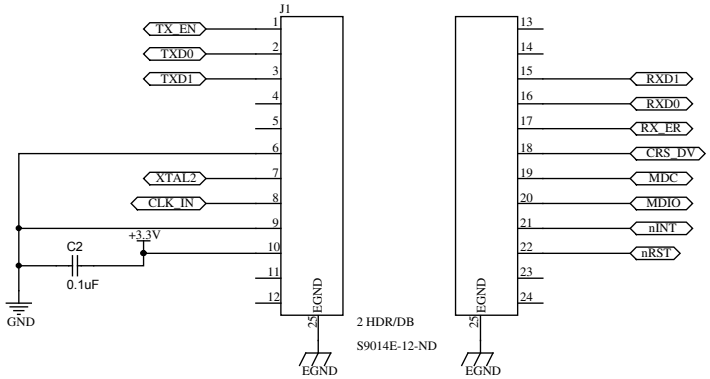

Americas

Atlanta - 678-957-9614
Boston - 774-760-0087
Chicago - 630-285-0071
Cleveland - 216-447-0464
Dallas - 972-818-7423
Detroit - 248-538-2250
Indianapolis - 317-773-8323
Los Angeles - 949-462-9523
Phoenix - 480-792-7200
Santa Clara - 408-961-6444
Toronto - 905-673-0699

Europe

Austria - Wels - 43-7242-2244-39
Denmark - Copenhagen - 45-4450-2828
France - Paris - 33-1-69-53-63-20
Germany - Munich - 49-89-627-144-0
Italy - Milan - 39-0331-742611
Netherlands - Drunen - 31-416-690399
Spain - Madrid - 34-91-708-08-90
UK - Wokingham - 44-118-921-5869

Asia/Pacific

Australia - Sydney - 61-2-9868-6733
China - Beijing - 86-10-8569-2100
China - Chengdu - 86-28-8665-5511
China - Chongqing - 86-23-8980-9588

Asia/Pacific (Continued)

China - Hangzhou - 86-571-2819-3187
China - Hong Kong SAR - 852-2943-5100
China - Nanjing- 86-25-8473-2460
China - Qingdao - 86-532-8502-7355
China - Shanghai - 86-21-5407-5533
China - Shenyang - 86-24-2334-2829
China - Shenzhen - 86-755-8864-2200
China - Wuhan - 86-27-5980-5300
China - Xiamen - 86-592-2388138
China - Xian - 86-29-8833-7252
China - Zhuhai - 86-756-3210040
India - Bangalore - 91-80-3090-4444
India - New Delhi - 91-11-4160-8631
India - Pune - 91-20-3019-1500
Japan - Osaka - 81-6-6152-7160
Japan - Tokyo - 81-3-6880-3770
Korea - Daegu - 82-53-744-4301
Korea - Seoul - 82-2-554-7200
Malaysia - Kuala Lumpur - 60-3-6201-9857
Malaysia - Penang - 60-4-227-8870
Philippines - Manila - 63-2-634-9065
Singapore - 65-6334-8870
Taiwan - Hsin Chu - 886-3-5778-366
Taiwan - Kaohsiung - 886-7-213-7828
Taiwan - Taipei - 886-2-2508-8600
Thailand - Bangkok - 66-2-694-1351

08/20/13

Microchip Technology Inc. • 2355 West Chandler Blvd. • Chandler, AZ 85224-6199

www.microchip.com

The Microchip name and logo, the Microchip logo, and MPLAB are registered trademarks of Microchip Technology Incorporated in the U.S.A. and other countries. All other trademarks mentioned herein are property of their respective companies. © 2013, Microchip Technology Incorporated, Printed in the U.S.A. All Rights Reserved. 10/13

DS50002210A

IC Plus IP101G PHY Daughter Board Information Sheet

The IC Plus IP101G PHY Daughter Board (AC320004-2) enables Ethernet communication with a variety of Microchip starter kits. For more information, please visit: http://www.microchip.com. From the Design Support menu, click **Development Tools**. Then, from the starter kit's menu, click **MPLAB® Starter Kit**, and then select the desired starter kit.
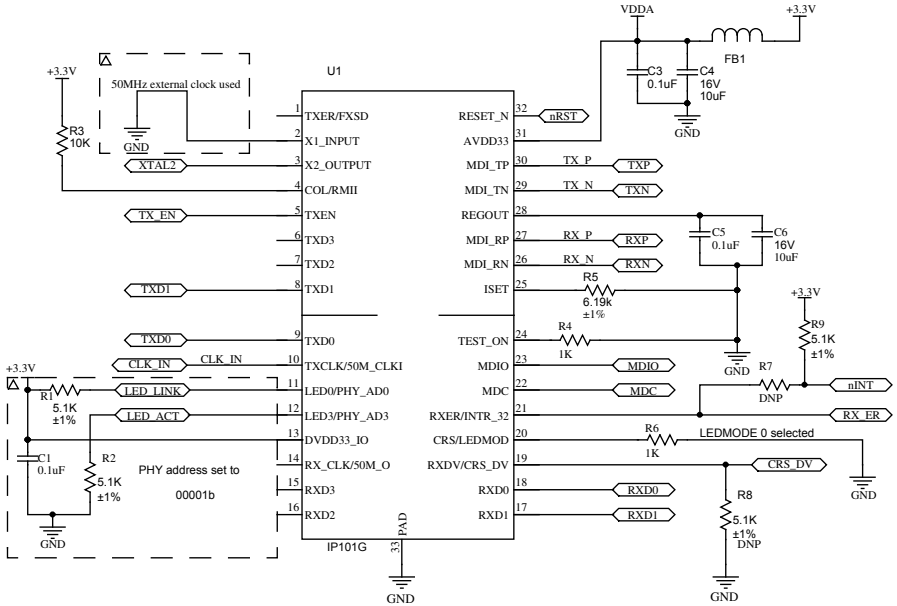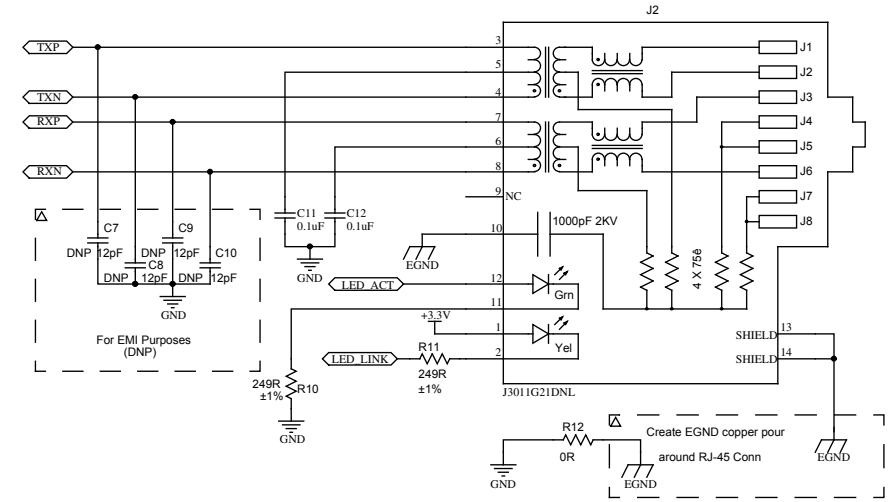
Schematics