samtec

EDGE RATE® CONTACT

ERF5–050–01–L–D–RA–TR

ERF5–010–01–L–D–RA–TR

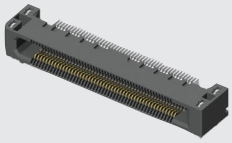

ERF5–010–05.0–L–DV–K–TR

(0.50 mm) .0197"

ERF5, ERF5-RA SERIES

RUGGED HIGH-SPEED SOCKET

Mates with:
ERM5

SPECIFICATIONS

For complete specifications and recommended PCB layouts see www.samtec.com?ERF5 or www.samtec.com?ERF5-RA

Insulator Material:
Black LCP
Terminal Material:
BeCu
Plating:
Au or Sn over
50 µ" (1.27 µm) Ni
Current Rating (-DV to -DV):
1.5 A per pin
(1 pin powered per row)
Current Rating (-DV to -RA):
1.6 A per pin
(1 pin powered per row)
Operating Temp Range:
-55 °C to +125 °C
Voltage Rating:
194 VAC mated with ERM5
RoHS Compliant:
Yes

PROCESSING

Lead–Free Solderable:
Yes
SMT Lead Coplanarity:
(0.10 mm) .004" max (010-040)
(0.13 mm) .005" max (050-075)

RECOGNITIONS

For complete scope of recognitions see www.samtec.com/quality

FILE NO. E111594

ALSO AVAILABLE
(MOQ Required)

- Friction Lock (–DV only)
- Weld Tab (–DV only)
- Other platings

Contact Samtec.

Notes:
Patented

Some lengths, styles and options are non-standard, non-returnable.

ERF5 – NO. OF POSITIONS PER ROW – 01 – PLATING OPTION – D – RA – TR

–010, –020, –030, –040, –050

–L
= 10 µ" (0.25 µm) Gold on contact, Matte Tin on tail

–TR
= Tape & Reel Packaging

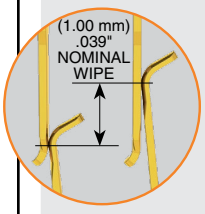

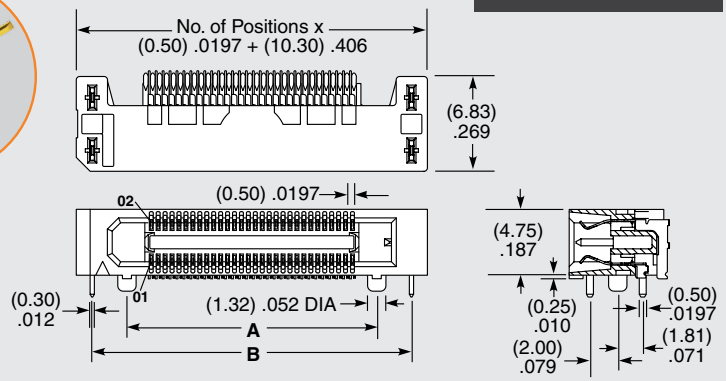

NO. OF POSITIONS	A	B
–010	(8.00) .315	(13.00) .512
–020	(13.00) .512	(18.00) .709
–030	(18.00) .709	(23.00) .906
–040	(23.00) .906	(28.00) 1.102
–050	(28.00) 1.102	(33.00) 1.299

HIGH-SPEED CHANNEL PERFORMANCE

ERM5/ERF5 @ 7 mm Mated Stack Height

Rating based on Samtec reference channel. For full SI performance data visit Samtec.com or contact SIG@samtec.com

26 Gbps

ERF5 – NO. OF POSITIONS PER ROW – LEAD STYLE – PLATING OPTION – DV – K – TR

–010, –020, –030, –040, –050, –060, –070, –075

–05.0
= 5 mm Body Height

–07.0
= 7 mm Body Height

(Available up to 50 positions only)

–L
= 10 µ" (0.25 µm) Gold on contact, Matte Tin on tail

–K
= (6.00 mm) .236" DIA Polyimide Film Pick & Place Pad

–TR
= Tape & Reel Packaging

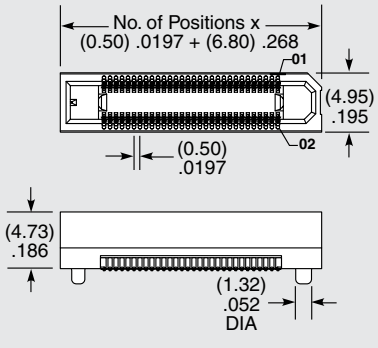

LEAD STYLE	A
–05.0	(4.91) .193
–07.0	(6.91) .272

MATED HEIGHT*			
ERF5 LEAD STYLE	ERM5 LEAD STYLE		
	–02.0	–04.0	–05.0
–05.0	(7.00) .276	(9.00) .354	(10.00) .394
–07.0	(9.00) .354	(11.00) .433	(12.00) .472

*Processing conditions will affect mated height.

Due to technical progress, all designs, specifications and components are subject to change without notice.