THIS DRAWING IS UNPUBLISHED.
VERTRAULICHE UNVEROEFFENTLICHTE ZEICHNUNG
RELEASED FOR PUBLICATION ,1997
FREI FUER VEROEFFENTLICHUNG
© COPYRIGHT 1997 BY AMP INCORPORATED. ALL RIGHTS RESERVED.
ALLE RECHTE VORBEHALTEN

MATED WITH:
PASSEND ZU:
HSB.6/35

| LOC | DIST |
|---|---|
| A1 | - |

PROJEKT NR.: -

REVISIONS
AENDERUNGEN

| P | LTR | DESCRIPTION BESCHREIBUNG | DATE | DWN | APVD |
|---|---|---|---|---|---|
| | A2 | Notes and design changed ECR-06-020881 | 30.08.06 | SR | SM |

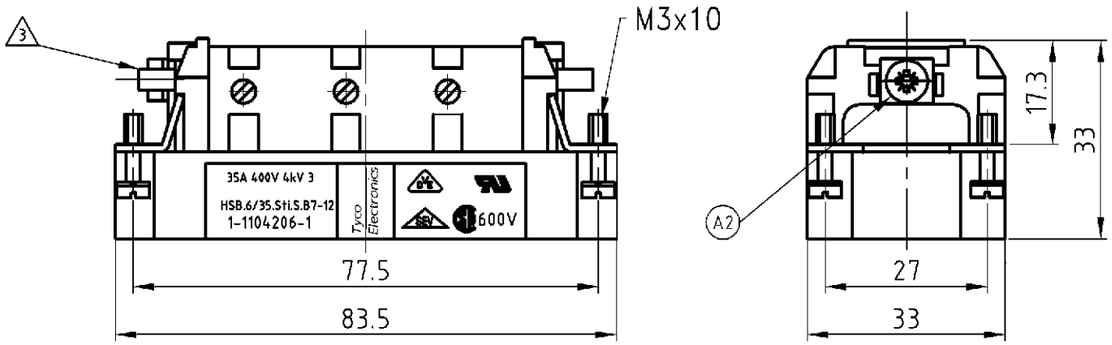


NOTES

1. FINISH: CONTACT , AG
2. POWER CONTACT: 7 TO 12
   OUTER DIMENSIONS OF INSULATION: MAX. ø 7.0 MM
3. GROUNDING CONTACT
4. SUITABLE HOOD SIZE 6: SERIES HB; HD; EMV; HIP
5. STANDARDS:
   DIN EN 61984, DIN EN 60664-1
6. PACKAGING: 5 PIECES IN A CARTON

Contact arrangement view from termination side

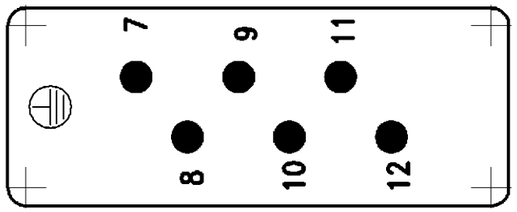


Assembling instruction

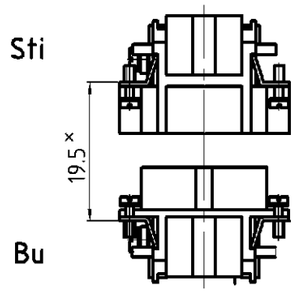


×Distance for guaranteed contact max: 21 mm

Panel cut-out for contact insert when used without housing

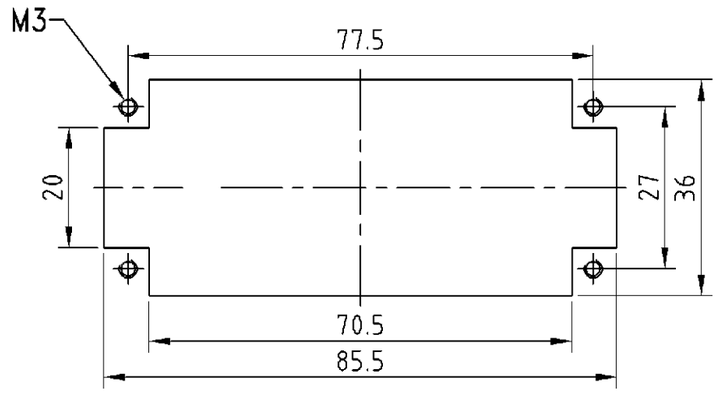


| 1-1 | DESCRIPTION | MATERIAL | COLOR | ITEM NO. POS. | REMARKS |
|---|---|---|---|---|---|
| 1 | male insert | | beige | 1 | - |

HSB.6/35.Sti.S 7-12

ORDERING TEXT / BESTELLTEXT

THIS DRAWING IS A CONTROLLED DOCUMENT FOR AMP INCORPORATED. IT IS SUBJECT TO CHANGE AND THE CONTROLLING ENGINEERING ORGANIZATION SHOULD BE CONTACTED FOR THE LATEST REVISION.
DIESES ZEICHNUNGSDOKUMENT WIRD DURCH AMP INCORPORATED KONTROLLIERT. AENDERUNGEN, DIE DEM TECHNISCHEN FORTSCHRITT DIENEN, SIND VORBEHALTEN. DEN JEWEILS LETZTGUELTIGEN AENDERUNGSSTAND ERFAHREN SIE AUF ANFRAGE.

DIMENSIONS: DIMENSIONEN: mm

TOLERANCES UNLESS OTHERWISE SPECIFIED: ALLGEMEINTOLERANZEN
n. ISO 8015
n. ISO 2768 - mH - E
n. DIN 16901 - 140
0 PLC #-
1 PLC #-
2 PLC #-
3 PLC #-
ANGLES /WINKEL #-

MATERIAL -

FINISH /OBERFLAECHE/FARBE -

DWN Rösgen 04.06.1998
CHK
APVD -
PRODUCT SPEC PRODUKTSPEZ. 108-74006
APPLICATION SPEC VERARBEITUNGSSPEZ. 114-74007
WEIGHT GEWICHT 86 g

AMP
HTS Elektrotechnik
53819 Neunkirchen, Germany

NAME
MALE INSERT
HSB.6/35.STI.S 7-12

| SIZE | CAGE CODE | DRAWING NO ZEICHNUNGS-NR. | RESTRICTED TO NUR FUER |
|---|---|---|---|
| A3 | 00779 | C-1104206 | - |

CUSTOMER DRAWING /KUNDENZEICHNUNG

| MASSSTAB | BLATT | OF VON | REV |
|---|---|---|---|
| 1:1 | 1 | 1 | A2 |