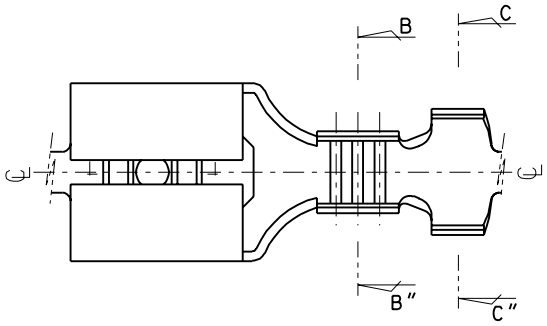

NOTES
1. MATERIAL: BRASS , 0.40mm THICKNESS
2. FINISH: 35720-1100 : UNPLATED
   35720-1110 : POST-PLATED TIN
3. RECOMMENDED LENGTH OF WIRE STRIP IS 4.1-4.6mm.

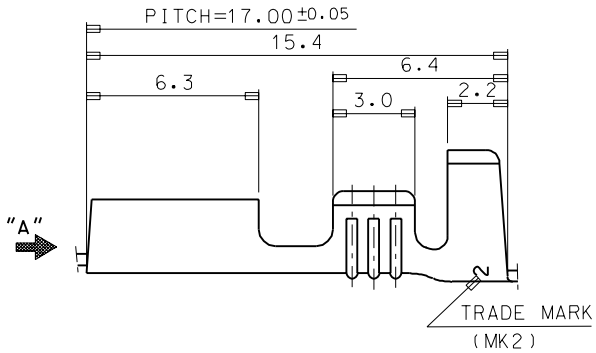

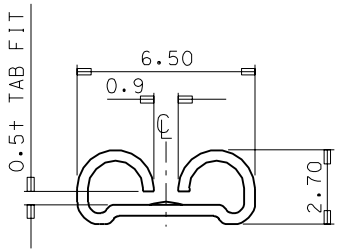

VIEW"A"

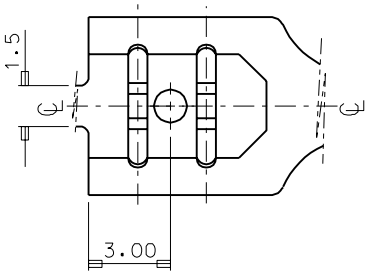

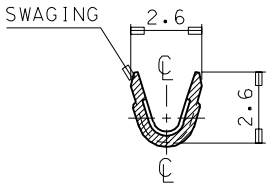

SECTION B-B"

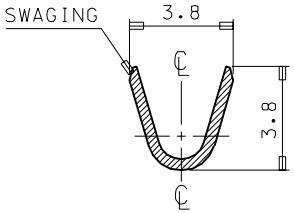

SECTION C-C"

				ASS'Y PART		QTY/REEL OR PACK	SURFACE AREA	MATERIAL SEE NOTES		WIRE RANGE AWG: #24-#22 MM²: 0.20-0.33	GENERAL TOLERANCES DIM. : ±0.30 ANGLE : ±0.20	molex MOLEX-KOREA CO.,LTD.
				DESCRIPTION	ENG.NO.	7,000 Q'TY /REEL	— MM²	DIMENSION CLASSIFICATION ■▼: CRITICAL ☒ : MAJOR □ : MINOR ( ): REFERENCE				REVISE ONLY ON CAD SYSTEM
				—	—	DIE NO. —	LAYOUT NO. —			INSULATION RANGE	TITLE: .205 SLIP-ON RECEPTACLE 1 of 1	
A	NEW RELEASE	PDR 93-018	93 11.2			WIRE CRIMP WIDTH —	INS. CRIMP WIDTH —	DRAWN BY J.S.KANG	CHK'D BY B.K.CHOI			
LTR	REVISION RECORD	ECN	DR. CHK DATE	DIE FEED —	APPL FEED 17.0	WBDW —	IBDW —	APP'D BY	SCALE 6/1	Ø2.5 MAX.	ENG.NO. SD 35720-11*0	REV A

ENG.NO SD 35720-11*0
EDP NO.
SIMILAR ITEM
PROJECT NO.
DO NOT SCALE DRAWING
DIMENSION IN METRIC

s7201100.dgn MK-9