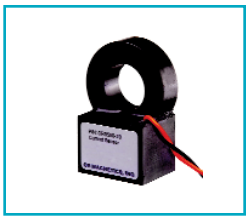

The **CR9500** Series Current Sensors provides a cost effective method for monitoring electrical current. The sensor generates a 0-5 VDC signal proportional to the input AC current. The output signal is average sensing, calibrated to RMS.
The sensor is used with process control and industrial instrumentation equipment. Especially suited for OEM applications that require a low cost solution for numerous monitoring locations.

The DC output can be connected directly to an analog input connection without additional signal conditioning. Care must be taken to ensure the burden impedance of the instrumentation is greater than 1.0 megohm. The unit will operate with lower burden impedance but at reduced accuracy.

OUTLINE DRAWING

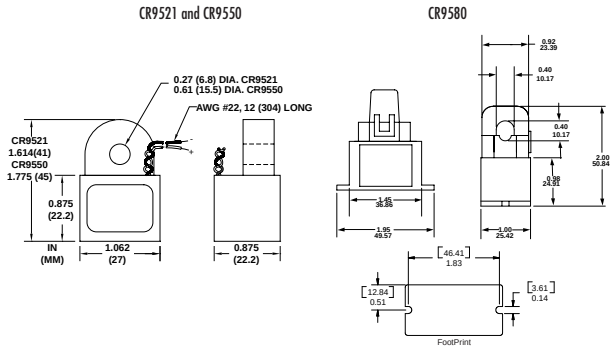

PART NUMBER

Part Number	AC Current Range
CR9521-10	10
CR9521-20	20
CR9521-50	50
CR9550-10	10
CR9550-20	20
CR9550-50	50
CR9580-10	10
CR9580-20	20
CR9580-50	50
CR9550-10-M	10
CR9550-20-M	20
CR9550-50-M	50
CR9580-10-M	10
CR9580-20-M	20
CR9580-50-M	50

Applications
OEM Current Sensing
Home Automation
Monitor Motor Operation

Features
Low Cost
Low Fixed Trip Point
Fully Isolated, Reverse Polarity Protected
Self-Powered
Available in Mountable Package
Output Overload Protected

Specifications
Accuracy: ±0.5% Full Scale (FS)
Ripple: 1% Max
Signal Out: 0-5 VDC
Max. Signal Out: 12 VDC
Frequency * : 50 to 400 Hz
Insulation Class: 600 V
Operating Temperature: -30 C to + 60 C
Storage Temperature: -55 C to + 85 C
Shipping Weight: 2 oz. (.06 Kg.)
Dielectric Withstand: 2,500 Vrms
Response Time: 250 ms. max. 10-90% FS
Calibration: Avg. Sensing, RMS Calibrated
Output Load: 1.0 Megohm or greater for rated accuracy
Weight 0.11 LBS.
* All specifications for operation at 60 Hz

Regulatory Agencies

RoHS 2002/95/EC

E

Relays and Switches