Alle Rechte vorbehalten/ *All rights reserved*

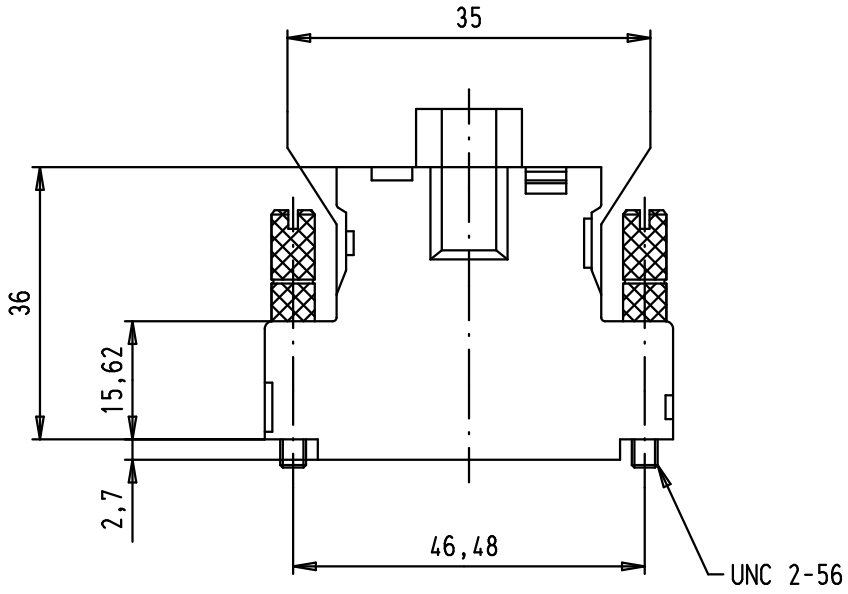

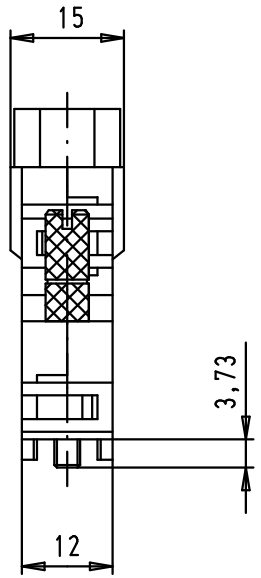

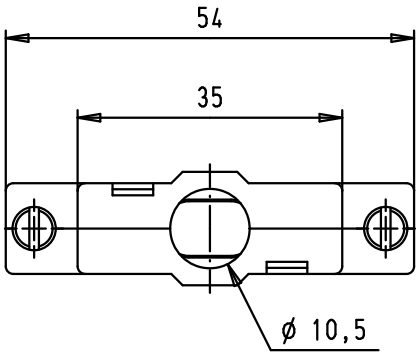

				Dat.	Name
			Detail.	03/08/06	PK
			Insp.		
			Stand.		
35278	28/08/08	PK			
33790	03/08/06	PK			
Mod.	Dat.	Name			

All Dim. in mm
Orig. Size DIN A 4

HARTING EURL
F-95972 Paris

Har-mik
Plastic hood with metal insert
for IDC pin/socket connector
with 2-56 UNC jack screws

TB 60 03 050 0143

Maßstab/ *Scale* 1:1

Blatt/ *Page* 1/1